Shiftable planetary gear reducer

$Md_{cont.\ max}$ 4’123 Nm

$Md_{int.\ max}$ 5’971 Nm

Data sheet

5.352G

english / 20120815/Wa

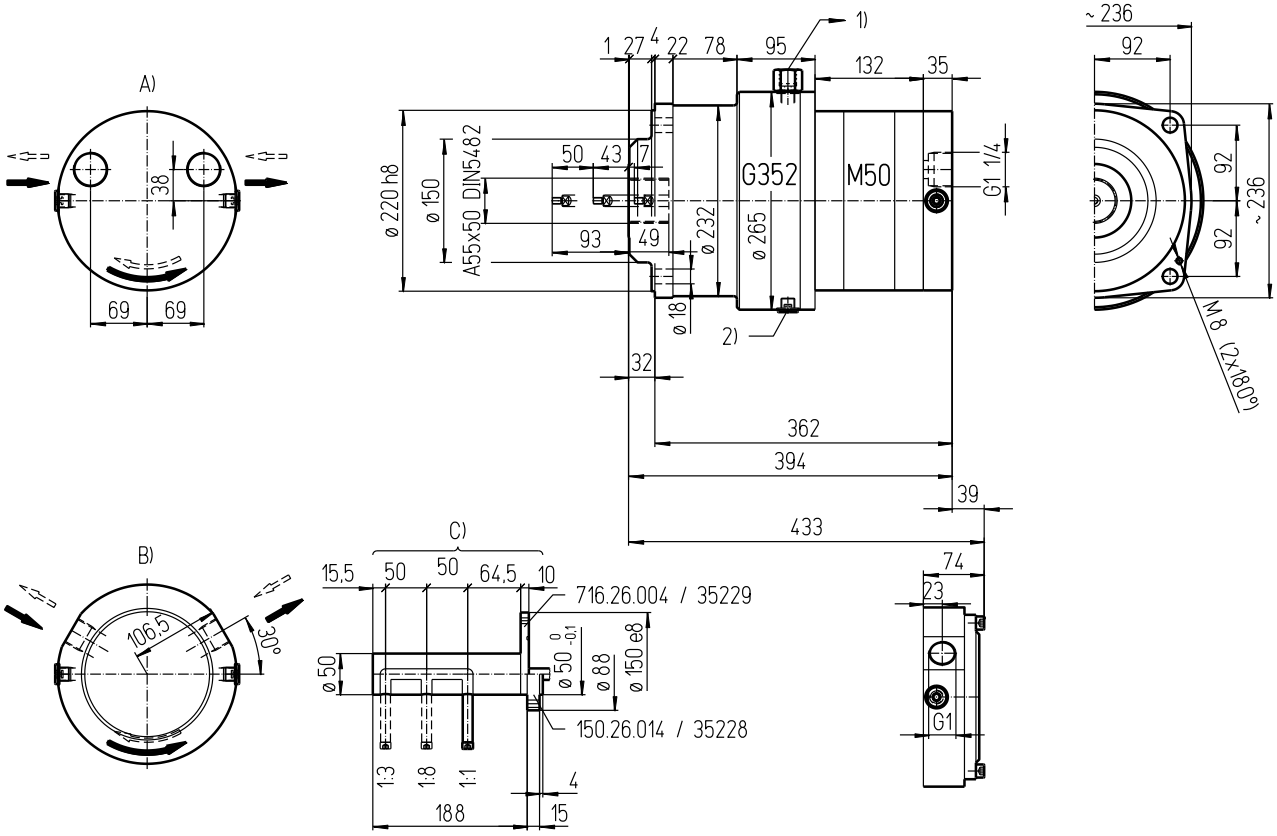

Oil connections:
A) G1 1/4 axial (5.352G)
B) G1 radial (5R352G)
1) Drain G1/2
2) Oil-drain plug G3/8

C) Gear shift according drawing no. 203.97.3

Important instructions:

Observe our installation and operating instructions
Before start up fill planetary gear with oil
Oil filling: approx. 5 Liter
Weight: approx. 89 kg
Fastening screw: M16 - 12.9 // Tightening torque: 365 Nm
Gear shifting only while standstill

Possible special design:
- 2 position gear shift
- Fix gear ratio (without gear shift)

Technical data:

Denomination		Output torque Nm						Output speed			Displacement Liter / rev.			Ratio		
		cont. 145 bar			int. 210 bar			min^{-1}								
Type	EDV-No.	I	II	III	I	II	III	I	II	III	I	II	III	I	II	III
M50-1/3/8G M50R-1/3/8G	5.352G 5R352G	500	1871	4123	724	2709	5971	750	194	88	0,224	0,864	1,904	1:1	1:3,857	1:8,500

Rollstar AG • CH-5704 Egliswil • phone +41 62 769 80 40 • fax +41 62 769 80 41 • www.rollstar.com • info@rollstar.com